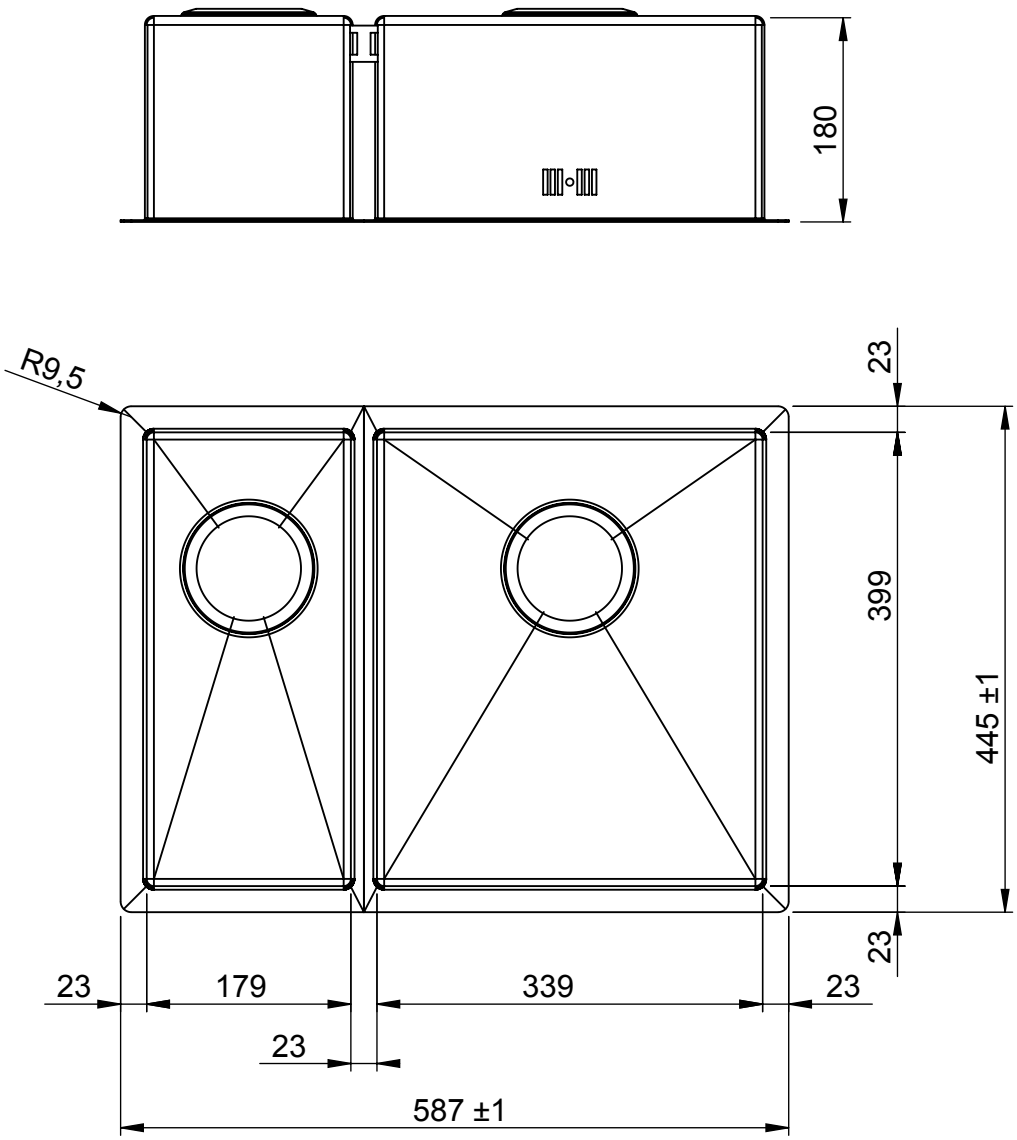INTRA QUADRA580SH